Vegetable Slicer Prep4You Combined Vegetable Slicer/ Cutter Mixer 2.6l,1 speed, 2discs incl, 750w, nema 5-15p

ITEM #

MODEL #

NAME #

SIS #

AIA #



602251 (DCOM26PUS) Combined Vegetable Slicer and Cutter Mixer 2.7 qt, with transparent copolyester bowl, 1800 rpm, 2 discs included (grater 2mm, slicer 4mm), 750W, NEMA 5-15P plug

Short Form Specification

Item No.

Combined Vegetable Slicer and Cutter Mixer 2.7 qt, with transparent copolyester bowl. Vegetable slicer ensures consistent cutting results thanks to the design patented lever-pusher. Constructed in a sturdy plastic material. 1,25 liters transparent half-moon hopper. Vegetables can be fed directly into the half moon hopper, a pusher presses the vegetables against the cutting discs ensuring an even cut in minimal time. 2 small hoppers for precise cuts on long vegetables dia. 55mm or 25mm. Ideal for grating, slicing/wavy slice, julienne and dicing. 2 discs included: slicer 4mm and grater 2mm. A safety micro switch stops the blade when the feed hopper is opened.
Cutter Mixer transparent copolyester lid with scraper and central feed hole for adding products in mid-cycle. Fine serrated blade rotor. Angled blades and conical base of the bowl ensure consistent mixing. All ingredients are processed evenly and quickly thanks to a special flow generated inside the bowl.
No-volt release system prevents accidental start of the appliance. All parts in contact with food are removable and Dishwasher safe. Waterproof, easy to clean, flat, soft-touch buttons. Single speed 1800 rpm with on/pulse/off function for simple operations. NEMA 5-15P plug

APPROVAL:

Main Features

- Combined appliance with two functions: vegetable slicer and cutter mixer.
- Equipped with vegetable slicer attachment for slicing, grating, shredding (julienne) as well as dicing and French fries cutting.
- Cutter mixer and emulsifier function included, for fast chopping, mixing, mincing, griding, liquidizing and kneading.
- Equipped with half moon hopper (1.32 qt capacity) and 2 small round feed chutes: 1" (25mm) and or 2 11/64" (55mm), for precise slicing of long shaped vegetables.
- Uniform cuts and maximized load capacity, thanks to the design patented lever-pusher.
- Large output chute for efficient ejection. Fits up to 7 3/4" high standard kitchen containers (like GN) under the output chute.
- Continuous feed model.
- Pulse function for quick and precise slicing and grating.
- Ergonomical frontal lever, suitable for left handed and right handed operators.
- Vegetable slicer blade stops when lever pusher is lifted for operator safety.
- Model includes 2 discs: 5/64" (2mm) grater, 5/32 " (4mm) slicer.
- Optional discs available of various sizes for slicing, grating and shredding.
- Bowl/lid scraper included for uniform smooth results (emulsifying) and continuous working.
- Transparent lid, with funnel shaped hole, to add ingredients during use.
- All ingredients are processed evenly and quickly thanks to a special movement generated inside the bowl.
- Pulse function to coarse chopping.
- Easy to clean and watertight control panel with on/ off button and pulse function.
- All parts in contact with food are removable without the use of tools, completely dismountable and dishwasher safe.
- Productivity: up to 100 settings per service for vegetable slicer, up to 50 settings per service for cutter mixer function.
- ErgoCert 4-star certification for ergonomic design and ease of use.
- Includes 2.7 quart transparent bowl with micro-toothed blades rotor.

Vegetable Slicer Prep4You Combined Vegetable Slicer/Cutter Mixer 2.6l,1 speed, 2discs incl, 750w, nema 5-15p

DITO SAMA

Vegetable Slicer
Prep4You Combined Vegetable Slicer/ Cutter Mixer 2.6l,1 speed, 2discs incl, 750w, nema 5-15p

Construction

- 1 speed: 1800 rpm.
- Motor power: 1 HP / 750 Watt.
- Microtoothed blades in 420 AISI stainless steel and ergonomic scraper in high resistant composite material to ensure consistent mixing.
- IPX5 (IP55) flat panel touch-control, watertight panel.
- Main switch ON/OFF on the back of the appliance.
- Asynchronous industrial motor with no brushes for high reliability and quiet functioning, stainless steel motor shaft.
- Food safety assured thanks to BPA-free materials and compliance with NSF standards.
- Product safety in accordance with international and UL standards.

Included Accessories

- 1 of Transparent lid for 2,6lt Cutter Mixer bowl — PNC 650117
- 1 of Stainless steel grating disc 2 mm (dia. 175mm) — PNC 650198
- 1 of Fine serrated blade rotor for 2.6lt Cutter Mixer — PNC 650226
- 1 of Transparent copolyester bowl for 2,6lt Cutter Mixer — PNC 650229
- 1 of Scraper for 2.6lt Cutter Mixer bowl — PNC 650230
- 1 of Ejector for Vegetable Slicer — PNC 650232
- 1 of Stainless steel slicing disc 4 mm (dia. 175mm) — PNC 650237

Optional Accessories

- Cleaning tool for TRS, TRK & TR210 3/16-5/16-3/8 in (5-8-10 mm) dicing grids — PNC 650110 ❑
- Transparent lid for 2,6lt Cutter Mixer bowl — PNC 650117 ❑
- Transparent lid without sealing for 3,6lt Cutter Mixer bowl (1 speed models) — PNC 650118 ❑
- 3 DISCS SET TRK1 (5/64" SLICER, 3/16" SLICER, 1/8" GRATER) — PNC 650196 ❑
- 6 DISCS SET (5/64" SLICING, 3/16" SLICING, 1/8" GRATING, 9/32" GRATING, 3/8" SLICER, 3/8"X3/8 " GRID) — PNC 650197 ❑
- Stainless steel grating disc 2 mm (dia. 175mm) — PNC 650198 ❑
- Stainless steel grating disc 3 mm (dia. 175mm) — PNC 650199 ❑
- STAINLESS STEEL GRATING DISC 5/32" (4 MM) — PNC 650205 ❑
- Stainless steel grating disc 7 mm (dia. 175mm) — PNC 650207 ❑
- PARMESAN DISC — PNC 650208 ❑
- Stainless steel shredding disc 2 mm (dia. 175mm) — PNC 650209 ❑
- Stainless steel shredding disc 4 mm (dia. 175mm) — PNC 650210 ❑
- STAINLESS STEEL JULIENNE DISC 5/16" (8 MM) FOR FRENCH FRIES — PNC 650211 ❑
- Stainless steel slicing disc 1 mm (dia. 175mm) — PNC 650213 ❑
- Stainless steel slicing disc 2 mm (dia. 175mm) — PNC 650214 ❑
- STAINLESS STEEL SLICING DISC 1/8 " (3 MM) — PNC 650215 ❑
- Stainless steel slicing disc 5 mm (dia. 175mm) — PNC 650216 ❑
- Stainless steel slicing disc 6 mm (dia. 175mm) — PNC 650217 ❑
- STAINLESS STEEL WAVY SLICING DISC 1/8" (3 MM) — PNC 650218 ❑
- STAINLESS STEEL WAVY SLICING DISC 3/16" (5 MM) — PNC 650219 ❑
- Aluminum slicing disc 8 mm (dia. 175mm) — PNC 650220 ❑
- Aluminum slicing disc 10 mm (dia. 175mm) — PNC 650221 ❑
- Dicing grid 8x8 (dia 175mm) — PNC 650222 ❑
- Dicing grid 10x10 (dia 175mm) — PNC 650223 ❑
- DICING KIT 5/16" - ALUMINUM SLICER 5/16", GRID 5/16"x5/16" (8X8MM) — PNC 650224 ❑
- DICING KIT 3/8" - ALUMINUM SLICER 3/8", GRID 3/8"x3/8" (10X10 MM) — PNC 650225 ❑
- Fine serrated blade rotor for 2.6lt Cutter Mixer — PNC 650226 ❑
- SMOOTH BLADE ROTOR FOR 2.7QT CUTTER MIXER — PNC 650227 ❑
- Stainless steel bowl for 2,6lt Cutter Mixer — PNC 650228 ❑
- Transparent copolyester bowl for 2,6lt Cutter Mixer — PNC 650229 ❑
- Scraper for 2.6lt Cutter Mixer bowl — PNC 650230 ❑
- Stainless steel bowl for 2,6lt Cutter Mixer, fine serrated rotor, lid with scraper — PNC 650231 ❑
- Ejector for Vegetable Slicer — PNC 650232 ❑
- Fine serrated blade rotor for 3.6lt Cutter Mixer — PNC 650233 ❑
- SMOOTH BLADE ROTOR FOR 3.8QT CUTTER MIXER — PNC 650234 ❑
- Stainless steel bowl for 3.6lt Cutter Mixer — PNC 650235 ❑
- Scraper for 3.6lt Cutter Mixer bowl — PNC 650236 ❑
- Stainless steel slicing disc 4 mm (dia. 175mm) — PNC 650237 ❑
- Transparent bowl for 2,6lt cutter mixer, fine serrated rotor, lid with scraper — PNC 650245 ❑
- Support for 1 disc, diam. 175mm and 205mm — PNC 653632 ❑
- Set of 3 discs, diam. 175 mm (1mm slicer, 4mm julienne/shredder, 7mm grater) — PNC 653867 ❑
- Set of 5 discs, diam. 175 mm (1mm and 6mm slicer, 7mm grater, 2mm julienne/shredder, 4mm julienne/ shredder) — PNC 653868 ❑

Intertek

Intertek

Vegetable Slicer
Prep4You Combined Vegetable Slicer/ Cutter Mixer 2.6l,1 speed, 2discs incl, 750w, nema 5-15p

Front

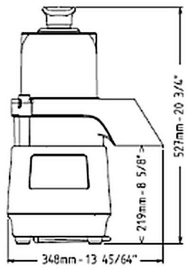

Side

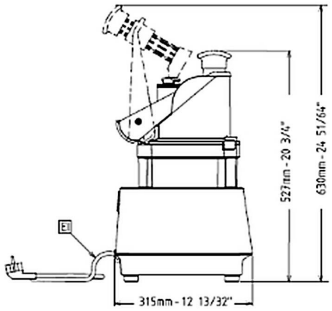

EI = Electrical connection

Rear side

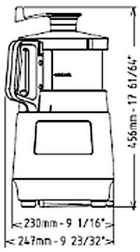

Electric

Electrical power, max:	0.75 kW
Total Watts:	0.75 kW

Key Information:

External dimensions, Width:	13 11/16" (348 mm)
External dimensions, Depth:	12 15/16" (328 mm)
External dimensions, Height:	20 3/4" (527 mm)
Shipping weight:	46 lbs (20.8 kg)

The company reserves the right to make modifications to the products without prior notice. All information correct at time of printing.

2026.11.20